Working load according to EN 13155/WLL	
Load capacity on flat material:	450kg
Load capacity Ø50-270mm:	450kg
Max. load capacity > 20mm material thickness	

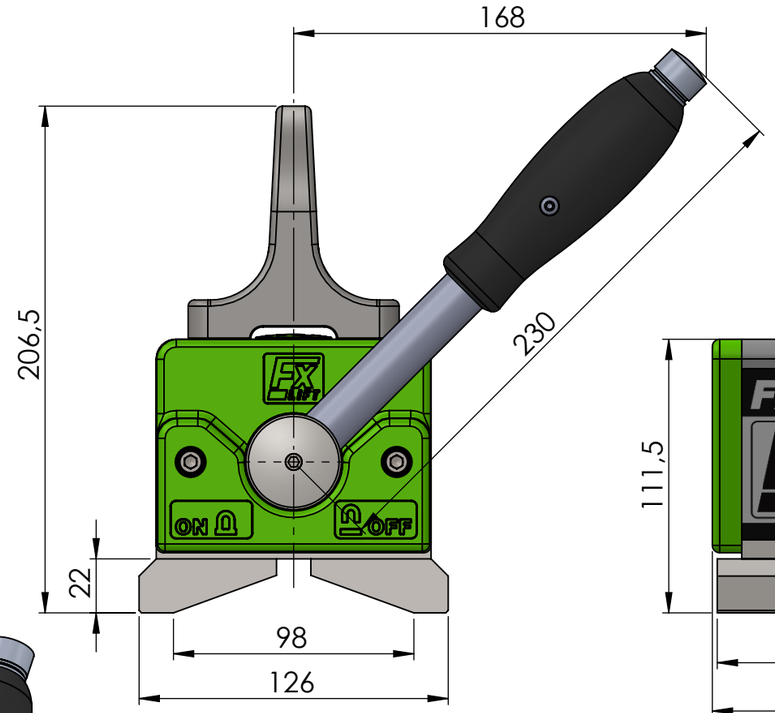

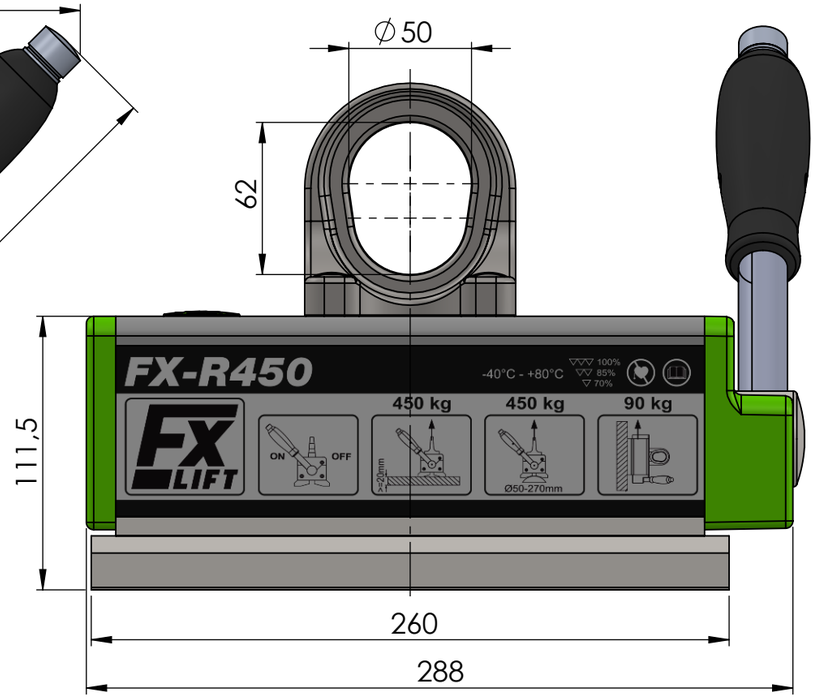

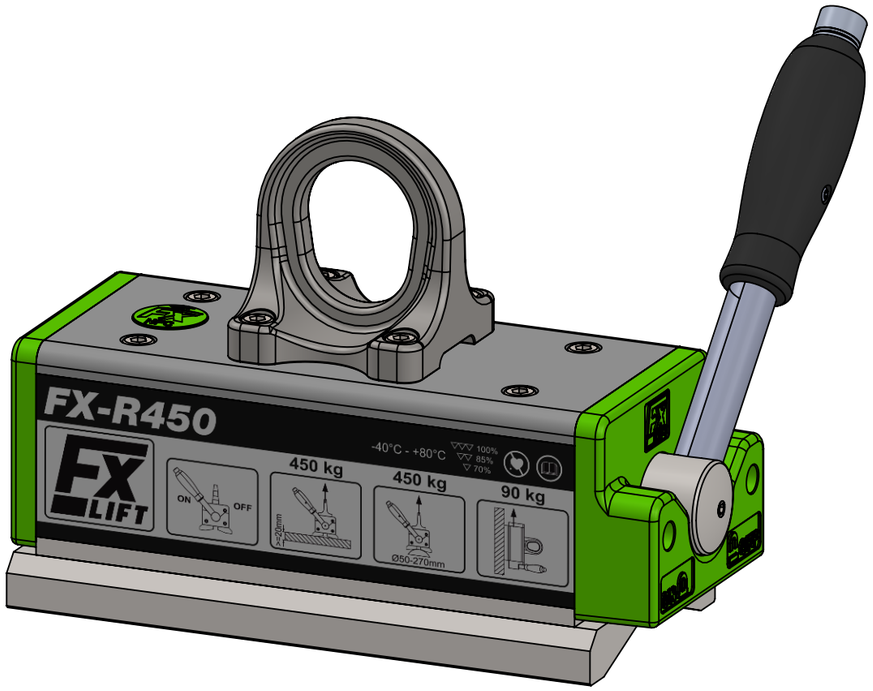

Green-Dot
NFC-Tag with magnet
related information

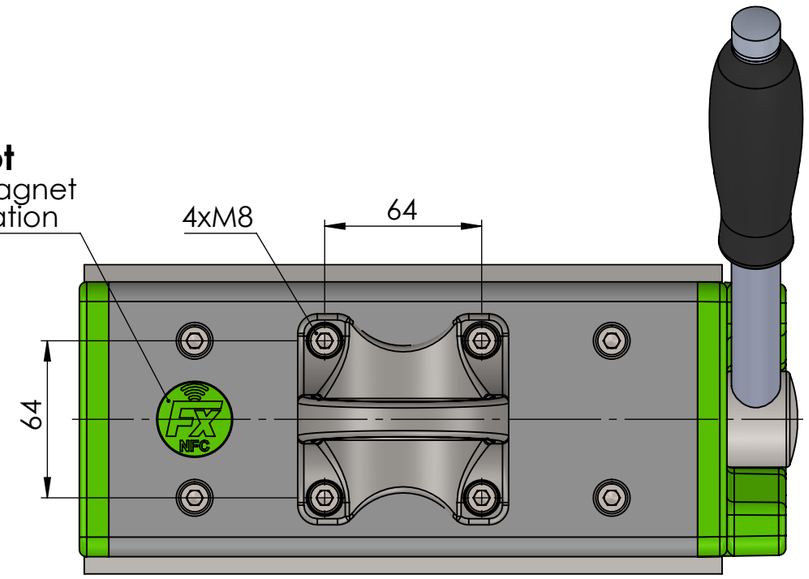

FX-R450	Air gap <0,2mm			Air gap 0,2-0,3mm			Air gap 0,3-0,6mm		
Material Thickness (mm)	Max. Load (kg)	Max. L (mm)	Max. B(mm)	Max. Load (kg)	Max. L (mm)	Max. B(mm)	Max. Load (kg)	Max. L (mm)	Max. B(mm)
>=6	150	1800	1500	120	1800	1000	100	1500	1250
>=10	300	2250	1500	250	2250	1250	210	2000	1250
>=15	400	2500	1500	350	2500	1250	300	2000	1250
>=20	450	3000	1500	400	3000	1250	350	2500	1250
Ø50-270	450	4000	-	375	3500	-	280	3000	-

Schutzvermerk nach DIN ISO 16016 beachten!
Nachdruck nur mit unserer Genemigung!

All rights reserved according to DIN ISO 16016!
Reprint with our permission only!

rev.	change	date	name
03	Green Dot	18.01.2024	TW
02	Tabelle	14.12.2023	TW

3,2 -0,05 -0,2

tolerance ISO 7168 M

	date	name
drawn	28.07.2022	TW
edit	31.01.2024	
appr.	31.01.2024	TW

FLAIG Magnetsysteme
www.flaig-te.de

material:
weight: 22.00
drawing no.; 0014006
description: **FX-R450**
part no.: 11010451
sheet 1 / 1
A3
scale: 1:2.5
Status: Freigegeben

© Copyright. All Rights Reserved